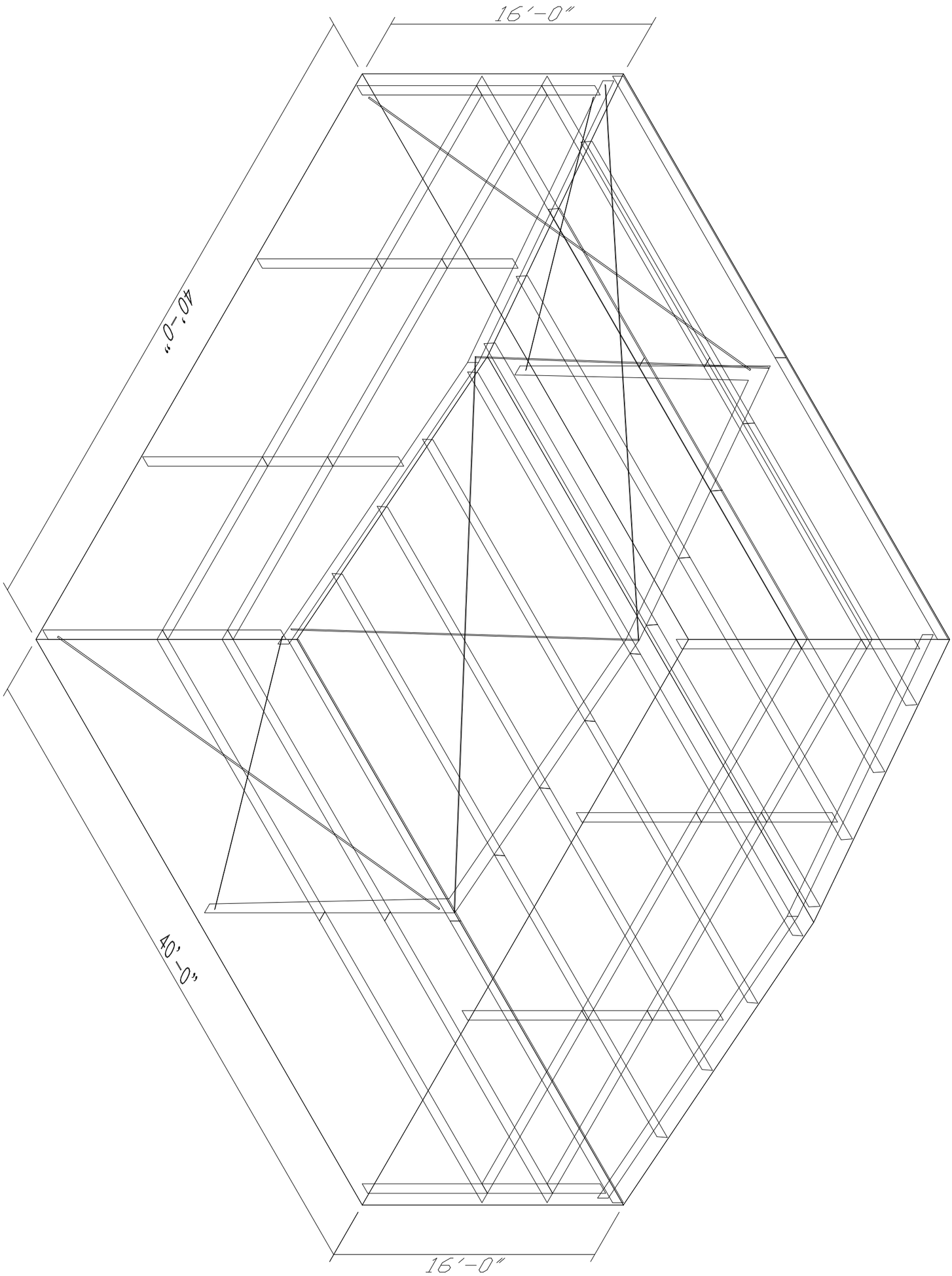
16'-0"
40'-0"
40'-0"
16'-0"

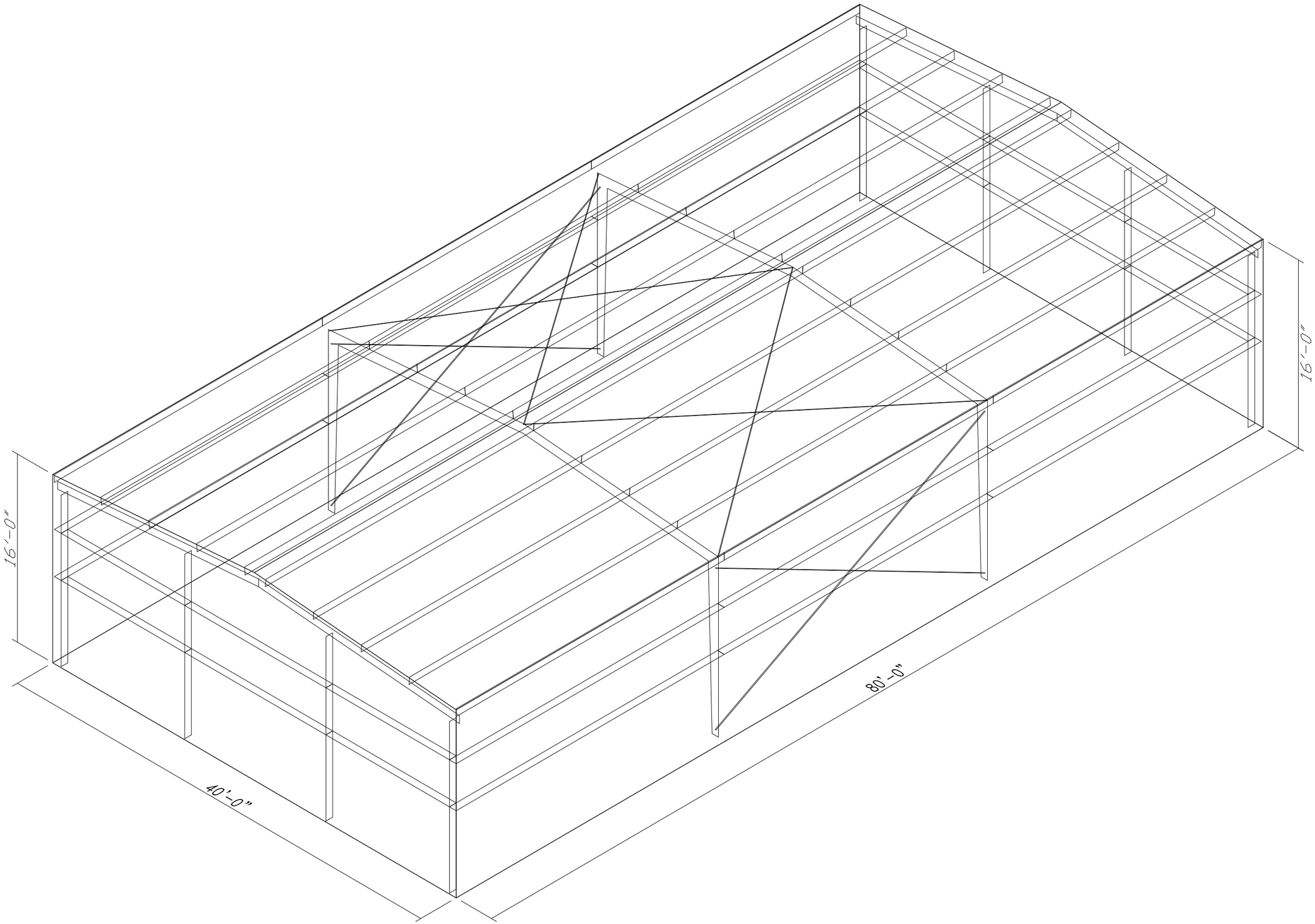
16'-0"
16'-0"
80'-0"
40'-0"

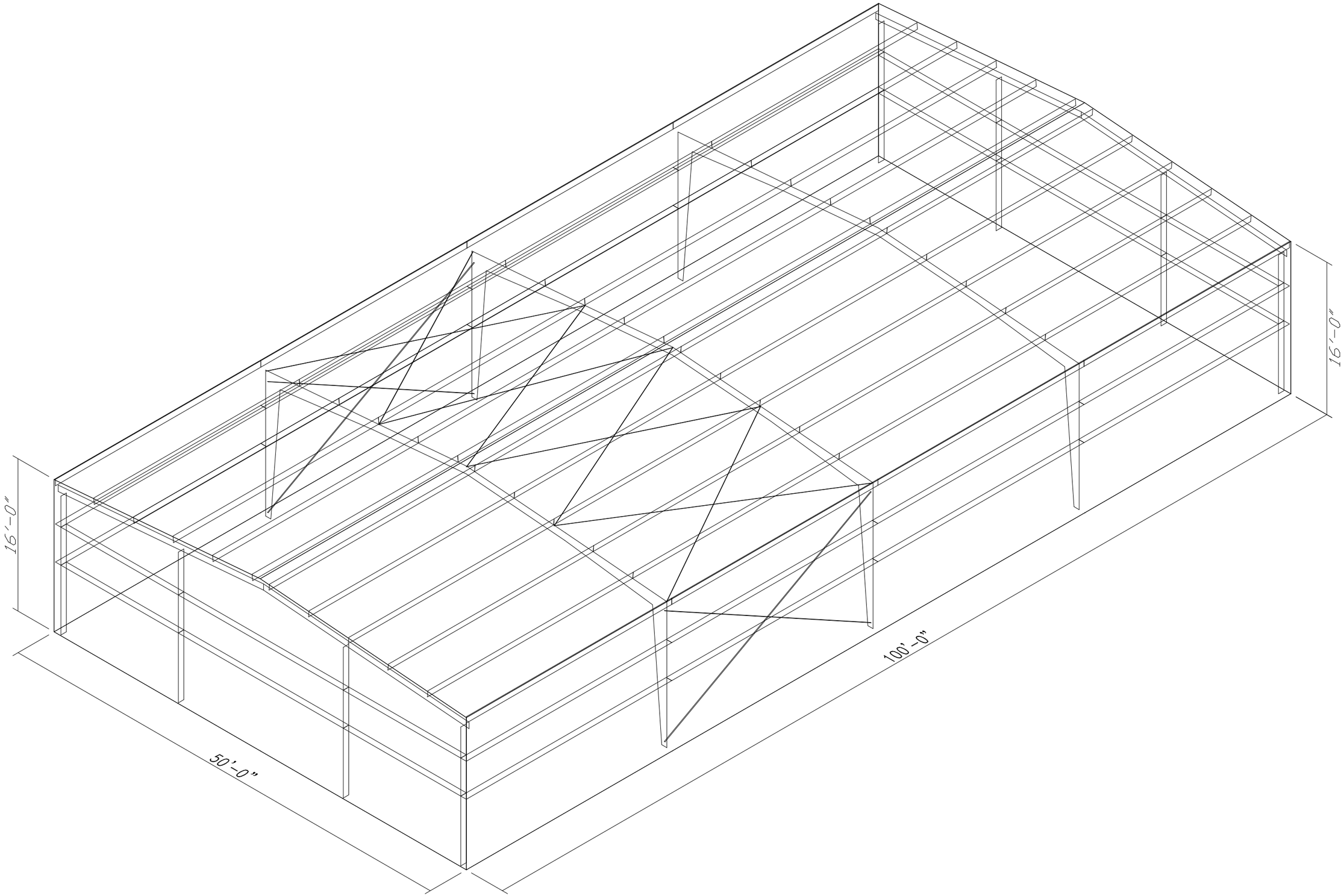
16'-0"
16'-0"
100'-0"
50'-0"

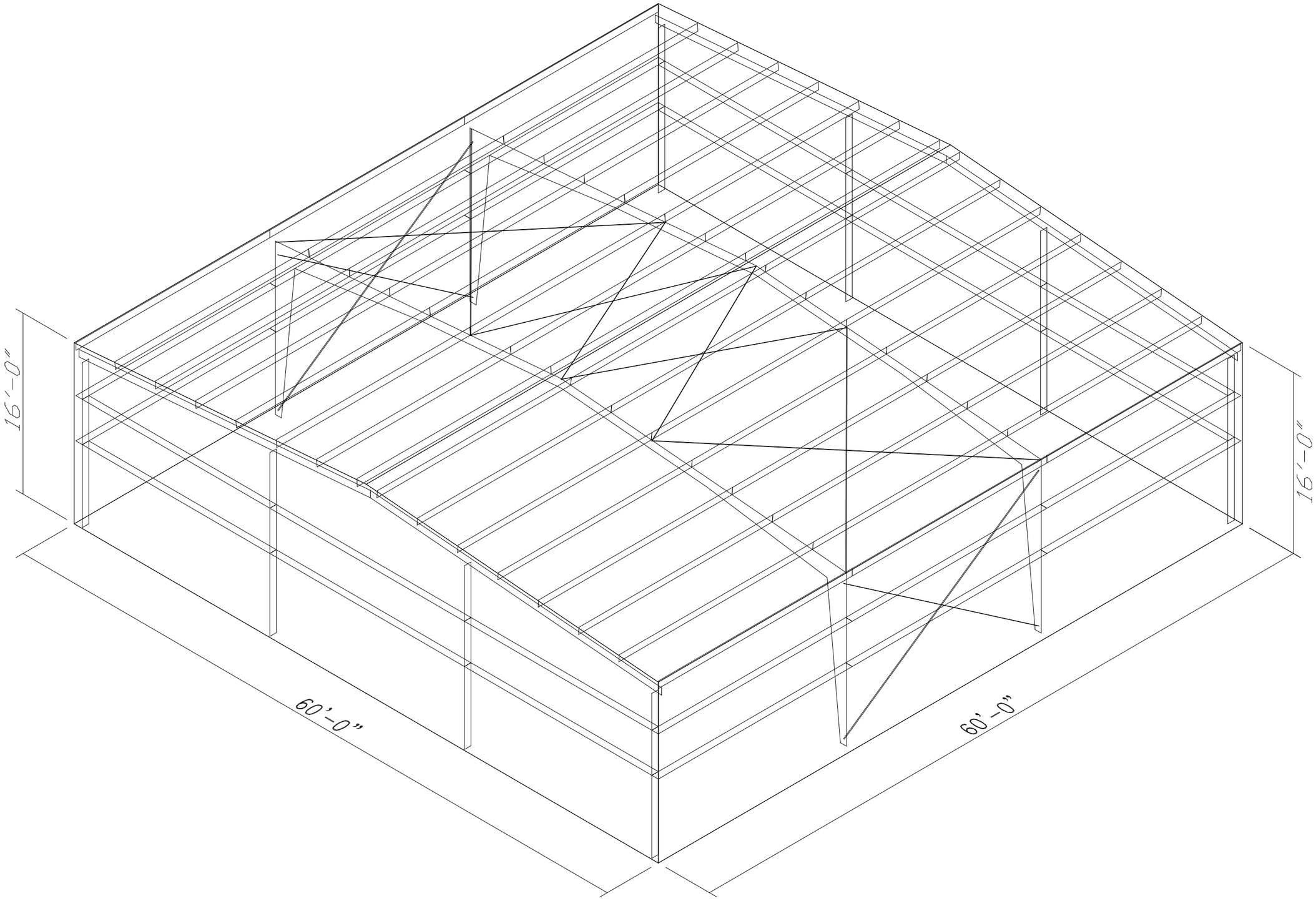
16'-0"
16'-0"
60'-0"
60'-0"

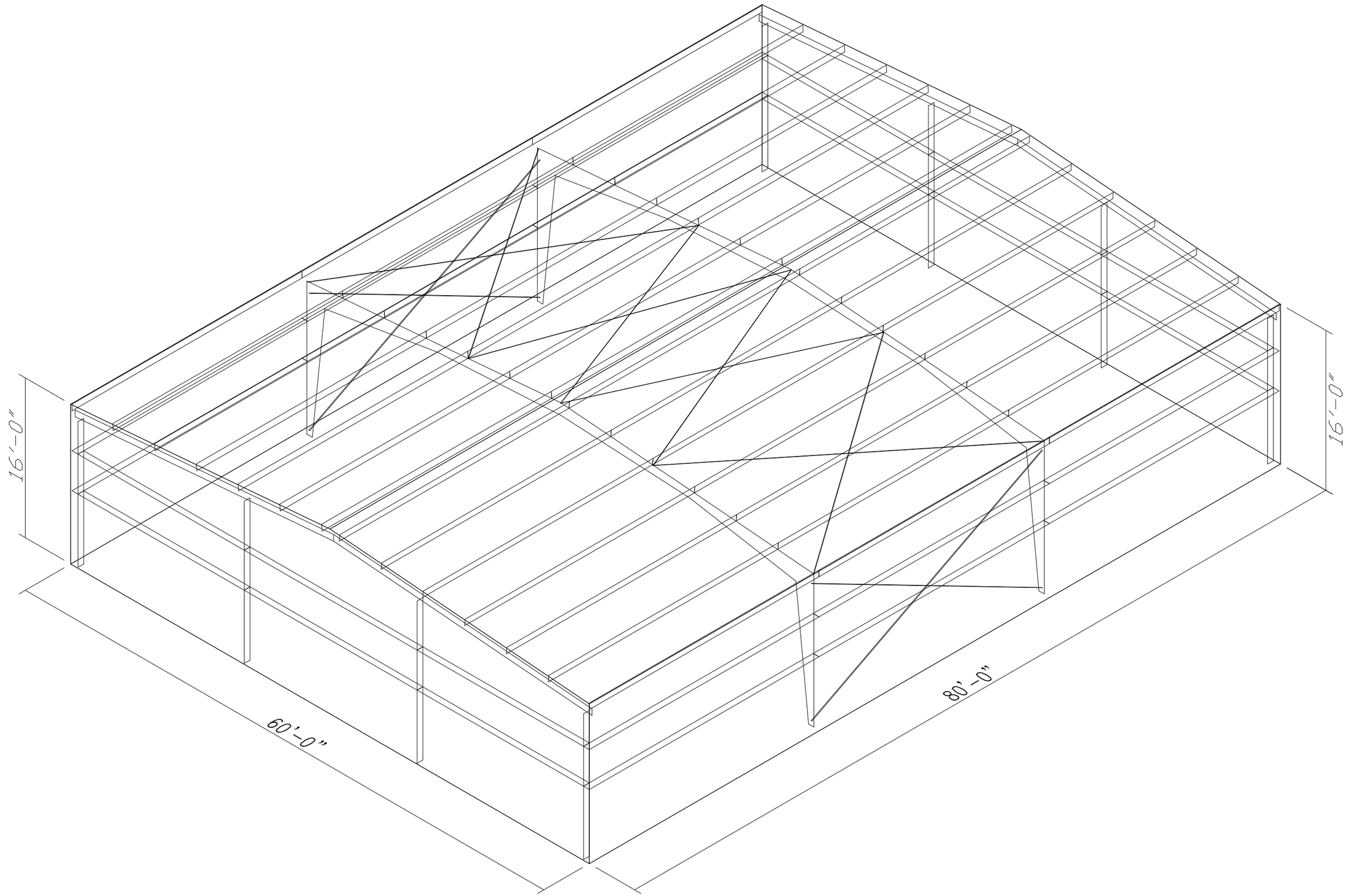
16'-0"
16'-0"
60'-0"
80'-0"

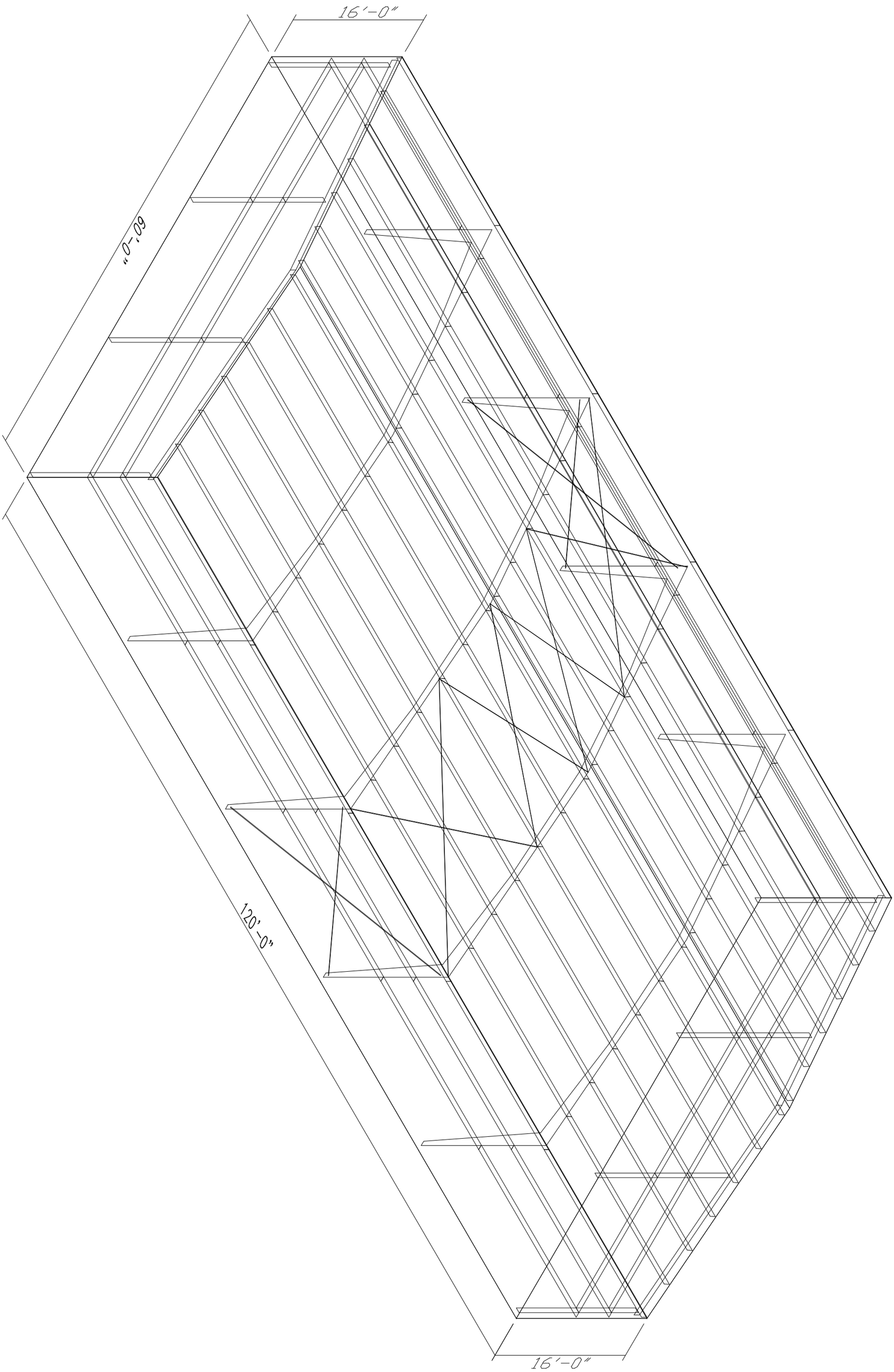
16'-0"
"0-"09
120'-0"
16'-0"

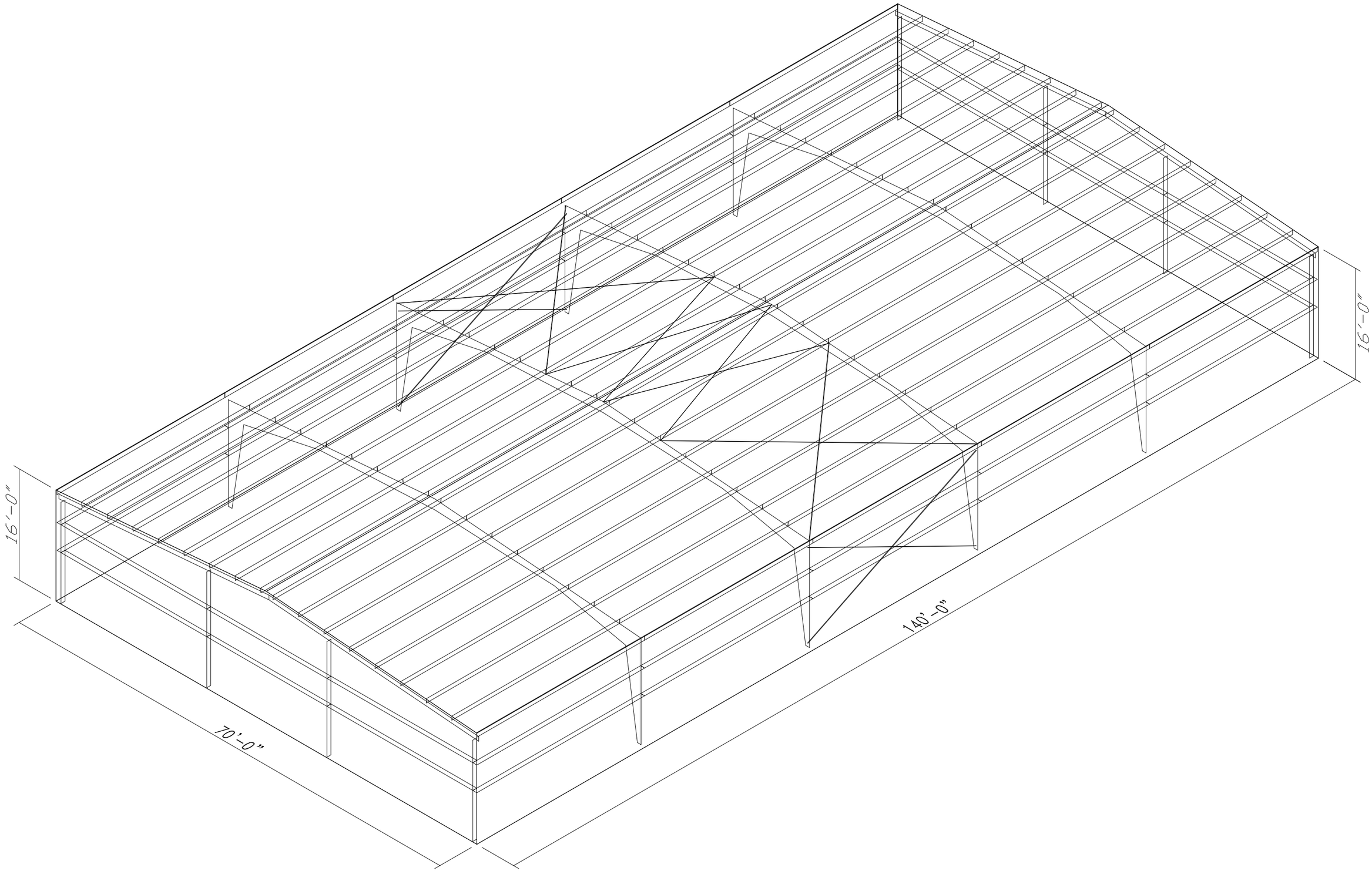
16'-0"
16'-0"
70'-0"
140'-0"

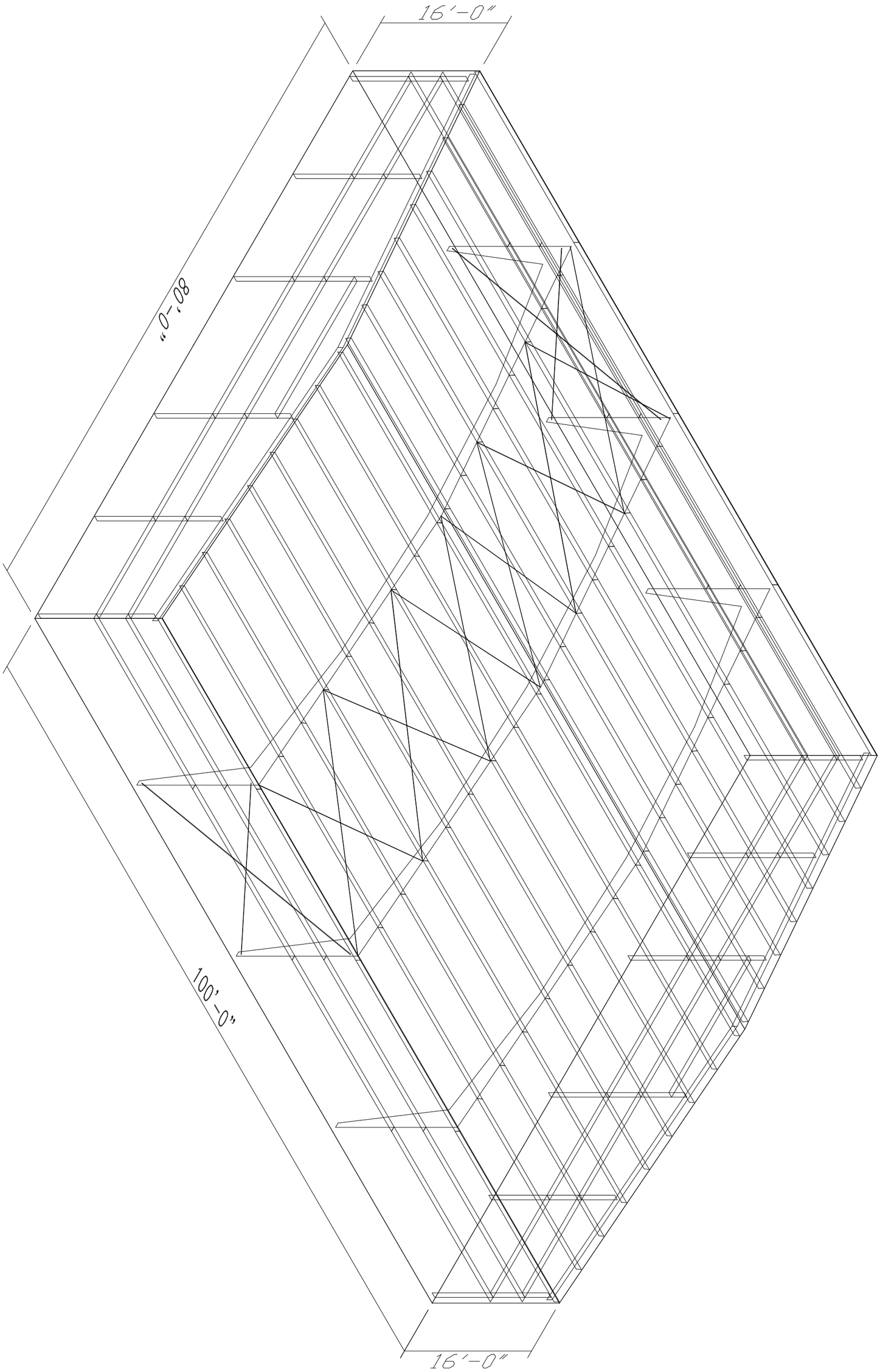
16′-0″
100′-0″
16′-0″

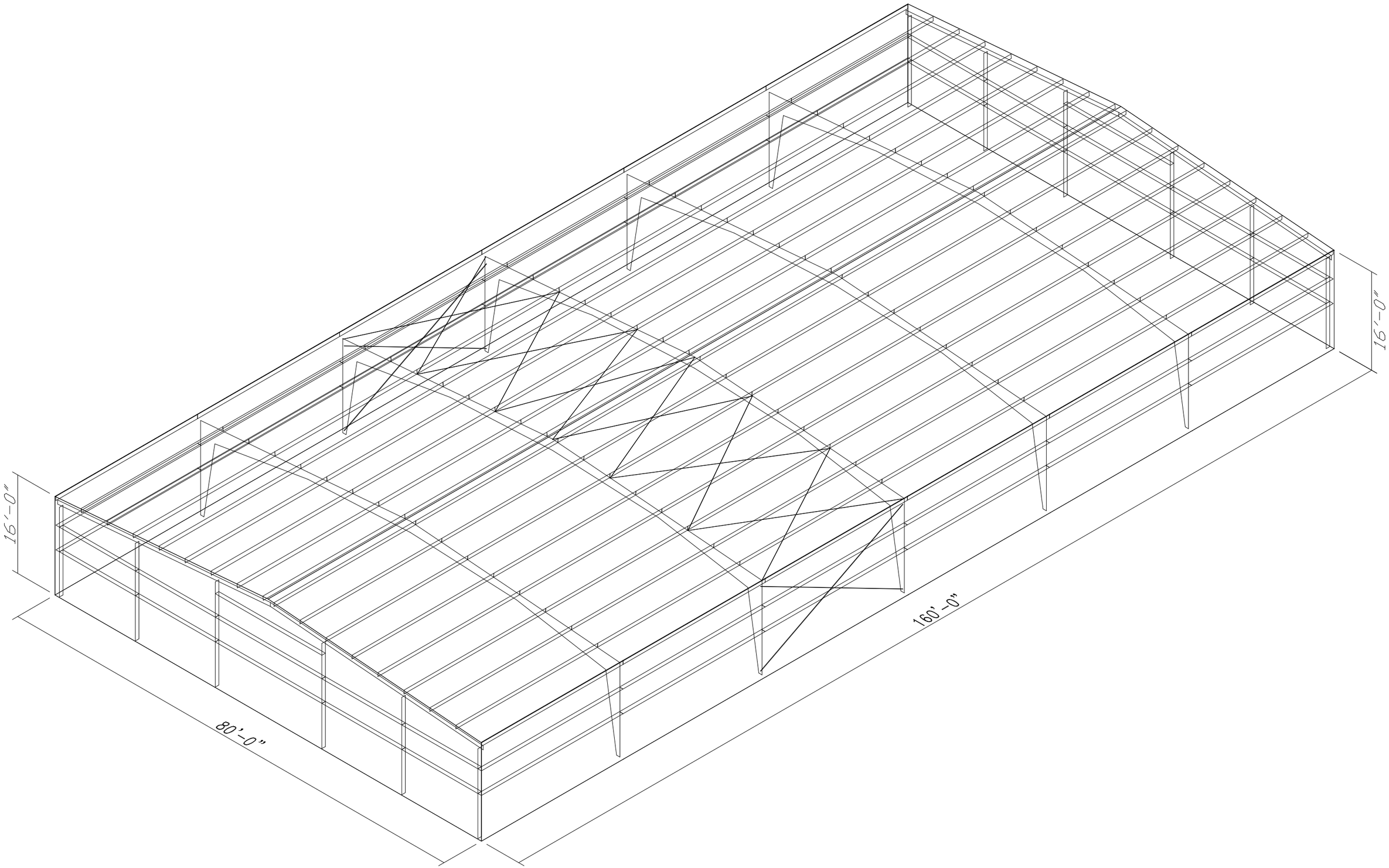
16'-0"
16'-0"
80'-0"
160'-0"

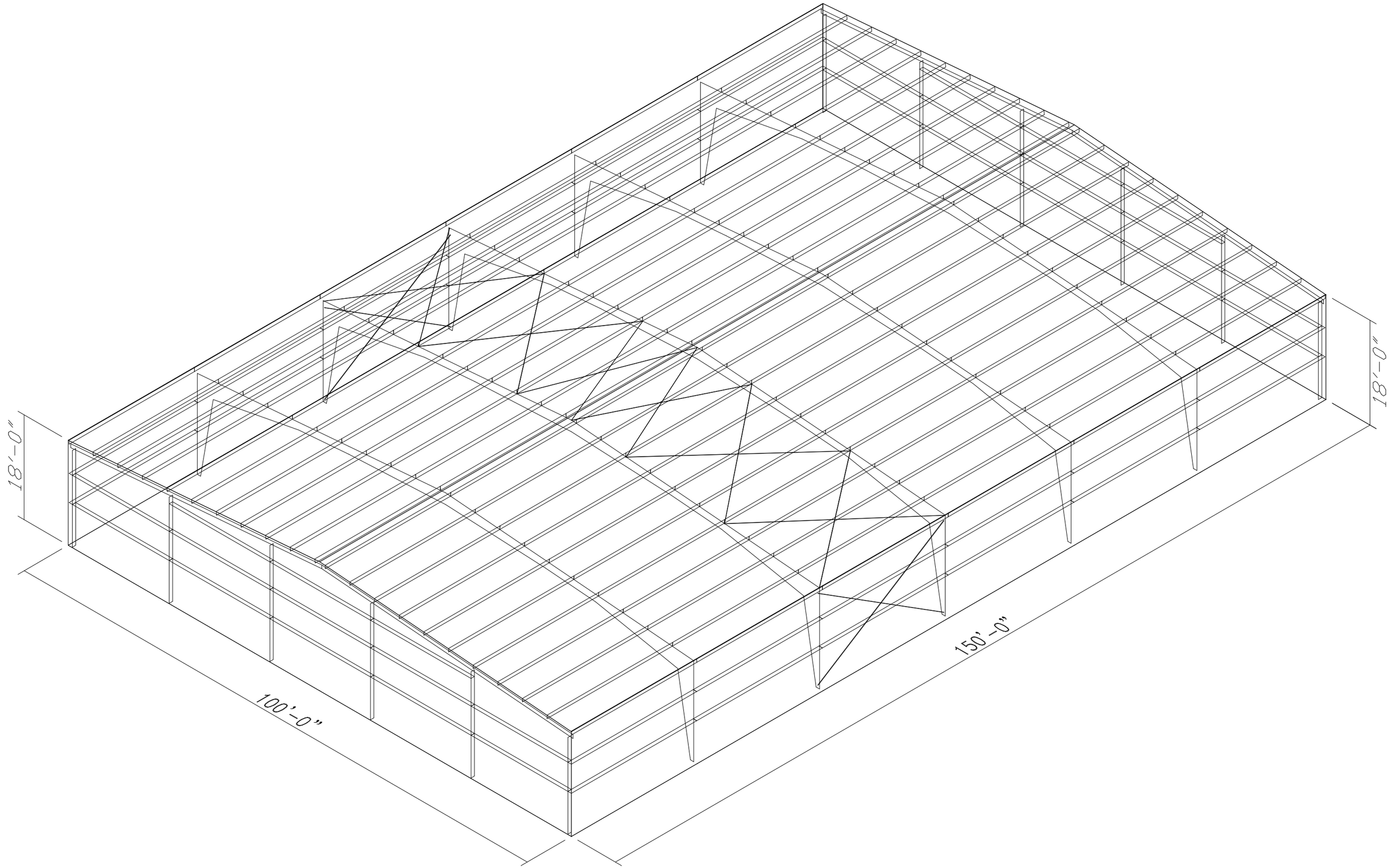
18'-0"
18'-0"
100'-0"
150'-0"